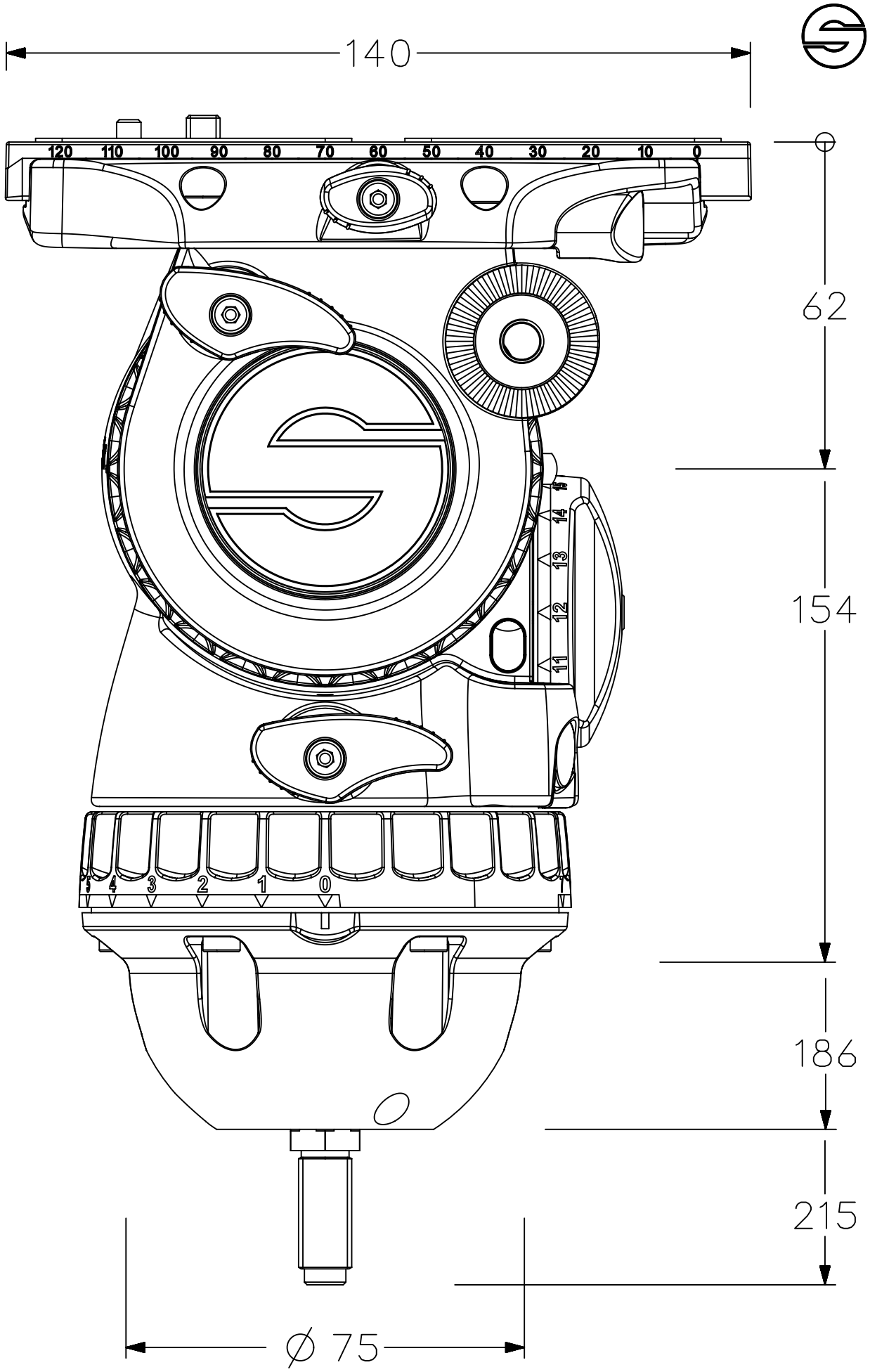

2021.02.12
E.RIVERA

S2069-0001

Final assembly, FSB 8 Mk II, 75mm, standard tie-down , sideload