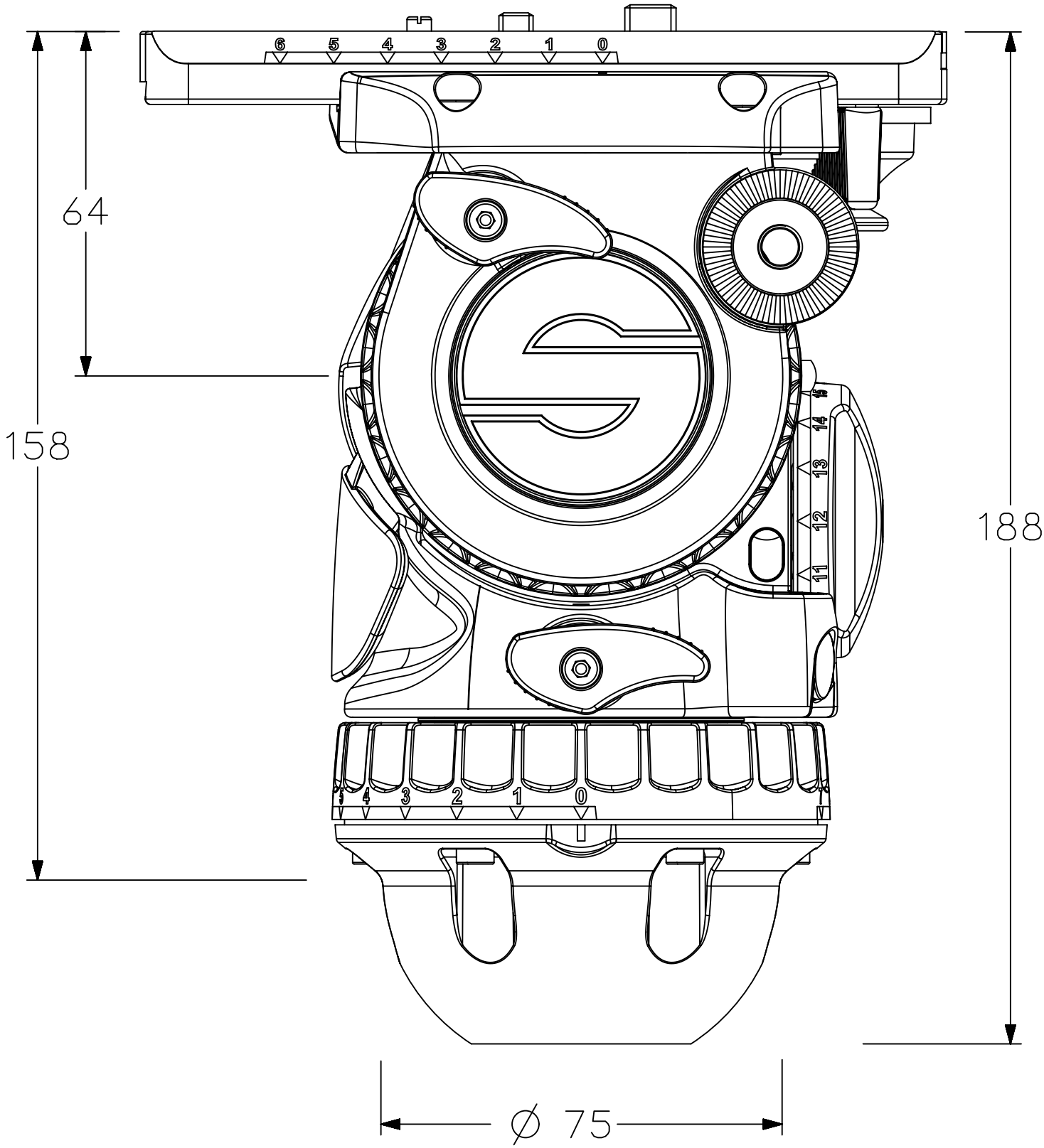

2020.02.12
E.RIVERA

S2068-0002

Final assembly, aktiv8T, 75mm, Touch and Go